HOROLOVAR SUSPENSION SPRING ASSORTMENTS

POPULAR ASSORTED STRENGTH

1--.0020” 2--.0023” 1--.0025” 1--.0030”

2--.0032” 2--.0035” 1--.0037” 2--.0040”

78.090 ..... $ 14.75 EA

INTERMEDIATE ASSORTED STRENGTH

1--.0018” 1--.0019” 1--.0021” 1--.0022”
1-.0024” 1--.0028” 1--.0031” 1--.0033”
1-.0036” 1--.0038” 1--.0045” 1--.0050”

78.091 ..... $ 14.75 EA

.....

400 DAY BLOCKS

price $ 5.75 EA

78.060 … Set Y37,Y38,Y39 $ 16.50

78.061 … Set Y43,Y44,Y45 $ 16.50

Schatz Standard Block No.
78.037
78.038
78.039
Block set.
78.060

Schatz Junior Block No.
78.040
78.041
78.042

Kundo Junior Block No.
78.043
78.044
78.045
Block Set.
78.061

78.050

.....

400 DAY LEVELING FEET

78.075 78.074

78.074 …… 3/4" Dia. …… $ 2.75 ea.
78.075 …… 1” Dia. …… $ 2.75 ea.

.....

HOROLOVAR LONG LIFE BATTERY

CM 71.010 .. LARGE (# 8 or # 9) .. $19.50
CM 71.015 .. Small (#10 or # 3) $17.50

.....

KUNDO BATTERY ADAPTOR

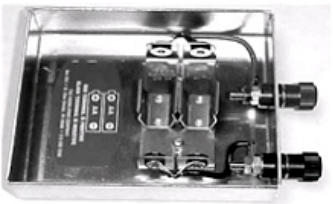

Battery adaptor to replace the # 8 & #9 Battery for Kundo
71.009 …… $ 19.00 ea.

RATCHET WHEEL

$ 4.75 EA

78.338	78.340	78.346
12 mm dia.	12.5 mm dia.	14.5 mm dia.
18 teeth	13 teeth	12 teeth

78.347	78.357	78.359
15.5 mm dia.	18 mm dia.	18.5 mm dia.
16 teeth	20 teeth	15 teeth

.....

400 DAY BEAT SETTING TOOL

This tool takes the work out of beat setting. After tightening the set screw, clamp the Jaws to the saddle or end of suspension unit and starting the pendulum, rotating. The Long arm will enable you to make micrometer adjustment.
24.565 …… $ 17.75 ea.

400 Day wheel

1 st, 2nd & 3 rd wheel ... $ 11.75 ea
Center wheel .....… $ 14.75 ea
Escape wheel ..... $ 16.00 ea
Verge.....$ 16.00 ea

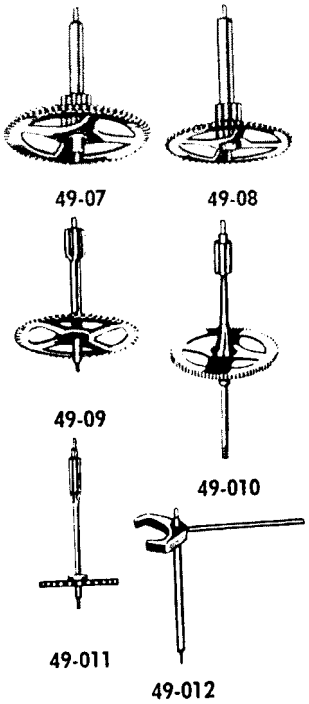

.....

400 Day Suspension Spring Fixture

Assembly Fixture for 400 day suspension springs
24.568 …… $ 42.50 ea.

.....

Price subject to change without notice.